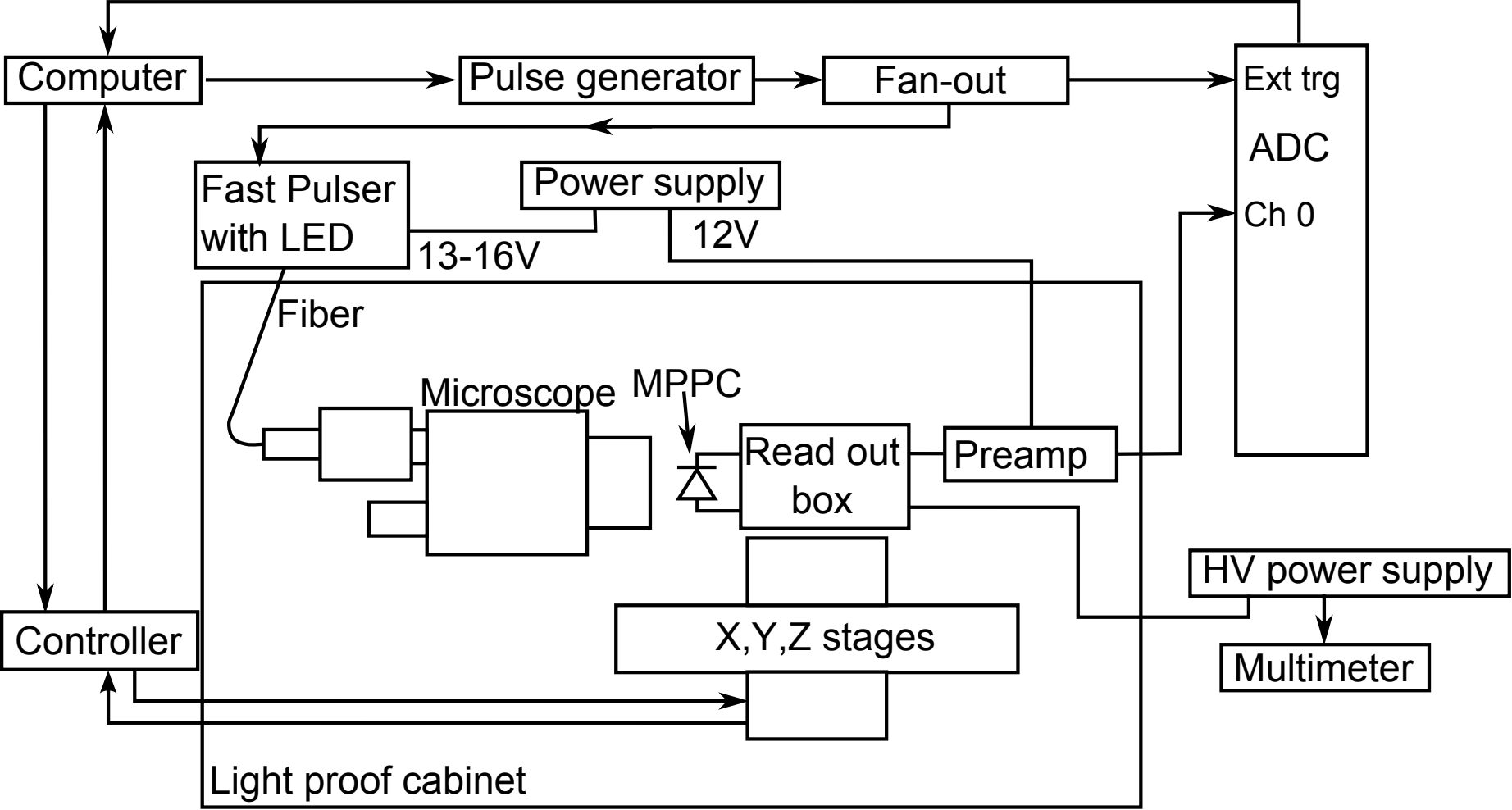
Computer
Pulse generator
Fan-out
Ext trg
ADC
Ch 0
Fast Pulser
with LED
Power supply
13-16V
12V
Fiber
Microscope
MPPC
Read out
box
Preamp
HV power supply
Multimeter
Controller
X,Y,Z stages
Light proof cabinet